APPLICATION OF GENETIC ALGORITHMS TO THE MULTI-OBJECTIVE OPTIMIZATION OF THE INSPECTION TIMES OF A SAFETY SYSTEM OF A PRESSURIZED WATER REACTOR

Pietro Giuggioli Busacca, Marzio Marseguerra, Enrico Zio

Department of Nuclear Engineering, Polytechnic of Milan
Via Ponzio 34/3, 20133 Milan, Italy

ABSTRACT

The purpose of this paper is to present an approach to optimization in which every target is considered as a separate objective to be optimized. For an efficient search through the solution space we use a multiobjective genetic algorithm which allows us to identify a set of Pareto optimal solutions providing the decision maker with the complete spectrum of optimal solutions with respect to the various targets. An application is illustrated regarding the choice of the time intervals for the periodic testing of the components of the High Pressure Injection System (HPIS) of a Pressurized Water Reactor (PWR).

1. INTRODUCTION

When attempting to optimize the design of engineered systems, the analyst is frequently faced with the demand of achieving several targets (e.g. low costs, high revenues, high reliability, low accident risks), some of which may very well be in conflict. At the same time, several requirements (e.g. maximum allowable weight, volume etc.) should also be satisfied. This kind of problem is usually tackled by focusing the optimization on a single objective which may be a weighed combination of some of the targets of the design problem and imposing some constraints to satisfy the other targets and requirements [1-2]. This approach, however, introduces a strong arbitrariness in the definition of the weights and constraints levels and a criticizable homogenization of physically different targets, usually all translated in monetary terms.

The complexity of industrial systems and the non-linearity of their behavior is such that explicit functions modeling the system evolution are not readily available. These difficulties pose severe limitations to the application of classical analytical and semi-analytical optimization methods such as those based on an evaluation of the gradient of the system function with respect to the solution variables [3]. Thus, thanks to the ever increasing computing power available, new numerical search algorithms are becoming popular. In particular here we focus the attention on the Genetic Algorithms (GAs). These are numerical search tools which function according to procedures that resemble the principles of natural selection and genetics [4-5]. Because of their flexibility, ease of operation, minimal requirements and global perspective, GAs have been successfully used in a wide variety of problems in several areas of engineering and life science [6-9]. In recent years an increasing number of GAs applications to single-objective optimizations have been observed in the field of reliability, maintainability and availability analysis [1,2,10-14]. In these applications, the

performance of any candidate system design solution is measured through the value of a single objective function, called fitness.

A more informative approach is one which considers all individual targets separately, aiming at identifying a set of solutions better than others with respect to all targets, but 'comparatively good' among themselves. Each member of this set is better or equal to the others of the set with respect to some, but not all, of the targets. The set thereby identified provides a spectrum of 'good' solutions which the decision maker can subjectively handle according to which targets he believes to be more or less important. For example, between two solutions a decision maker could prefer the one with highest reliability although obtained at higher costs or vice versa he might privilege low costs, thus giving up some reliability.

In this paper we present the genetic algorithms' approach to multiobjective optimization and apply it within the reliability/availability analysis framework. In the next Section we present the basic principles behind the genetic algorithm here adopted, formulate the multiobjective optimization problem within the frame of Pareto optimality and provide the details of the extension of the adopted genetic algorithm within a dominance scheme for multiobjective optimization. A general Fortran computer code called MOGA (MultiObjective Genetic Algorithm) has been developed by the authors and an application is presented in Section 3 with regards to the choice of the time intervals for the periodic testing of the components of the High Pressure Injection System (HPIS) of a Pressurized Water Reactor (PWR). The paper ends with a Section devoted to some conclusions and discussions.

2. MULTIOBJECTIVE GENETIC ALGORITHMS

In this Section we present the extension of the genetic algorithm approach to multiobjective problems [15-16]. In order to treat simultaneously several objective functions, it is necessary to substitute the single-fitness based procedure employed in the single-objective GA for comparing two proposals of solution. The comparison of two chromosome-coded solutions with respect to several objectives may be achieved through the introduction of the concepts of *Pareto optimality* and *dominance* which enable solutions to be compared and ranked without imposing any a priori measure as to the relative importance of individual objectives, neither in the form of subjective weights nor arbitrary constraints.

Let us consider N different objective functions $f_i(\underline{X})$ $i=1,...,N$ where $\underline{X}$ represents the vector of independent variables identifying a generic proposal of solution. We say that solution $\underline{X}$ *dominates* solution $\underline{Y}$ if $\underline{X}$ is better on all objectives, i.e. if $f_i(\underline{X}) > f_i(\underline{Y})$ *for* $i=1,...,N$. If a solution is not dominated by any other in the population, it is said to be a *nondominated* solution. Using this definition, a ranking of the population can be readily performed. All nondominated individuals in the current population are identified. These solutions are considered the best solutions, and assigned the rank 1. Then, these solutions are virtually removed from the population and the next set of nondominated individuals are identified and assigned rank 2. This process continues until every solution in the population has been ranked. The selection and replacement procedures of the multiobjective genetic algorithms are based on this ranking: every solution belonging to the same rank class has to be considered equivalent to any other of the class, i.e. it has the same probability of the others to be selected as a parent and to survive the replacement.

During the optimization search, an archive of a given number of nondominated solutions representing the dynamic Pareto optimality surface is recorded and updated. At the end of each generation, nondominated solutions in the current population are compared with those already stored in the archive and the following archival rules are implemented:

1. If the new solution dominates existing members of the archive, those are removed and the new solution is added;
2. if the new solution is dominated by any member of the archive, it is not stored;
3. if the new solution neither dominates nor is dominated by any member of the archive then:
   - if the archive is not full, the new solution is stored.
   - if the archive is full, the new solution replaces the *most similar* one in the archive. (an appropriate concept of distance being introduced to measure the similarity between two solutions: in this paper we shall adopt a euclidean distance based on the values of the fitnesses of the chromosomes);

The setup of an archive of nondominated solutions can also be exploited by introducing an elitist parents' selection procedure which should in principle be more efficient. Every solution in the archive (or a pre-established fraction of the population size N_p, typically $N_p/4$, if the archive's size is too large) is chosen once as a parent in each generation. This should guarantee a better propagation of the genetic code of nondominated solutions, and thus a more efficient evolution of the population towards Pareto optimality.

At the end of the search procedure the result of the optimization is constituted by the archive itself which gives the Pareto optimality region.

3. MULTIOBJECTIVE OPTIMIZATION OF THE INSPECTION TIMES OF A SAFETY SYSTEM

Let us consider the high pressure injection system (HPIS) of a pressurized water reactor (PWR) [1,17]. Figure 1 shows a simplified schematics of a specific HPIS design. The system consists of three pumps and seven valves. During normal reactor operation, one of the three charging pumps draws water from the volume control tank (VCT) in order to maintain the normal level of water in the primary reactor cooling system (RCS) and to provide a small high-pressure flow to the seals of the RCS pumps. Following a small loss of coolant accident

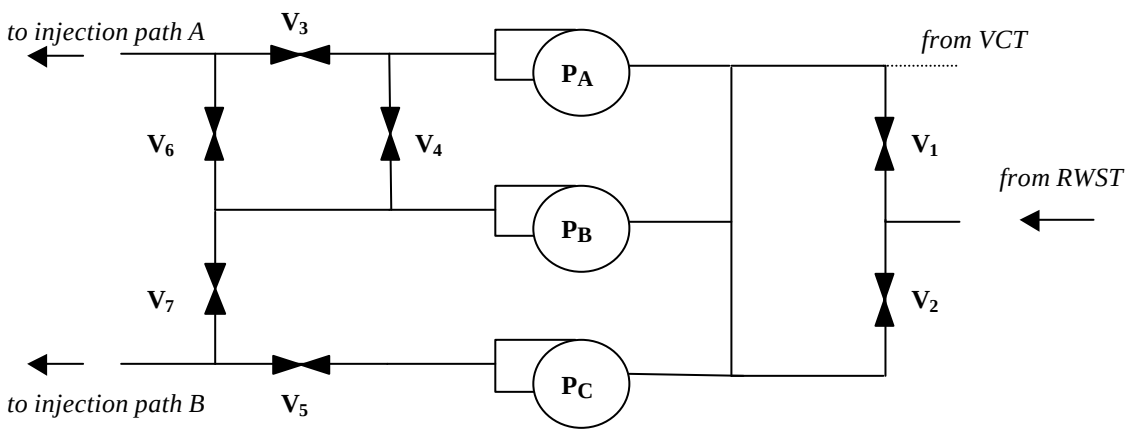

Figure 1: The simplified HPIS system

(LOCA), the HPIS is required to supply a high pressure flow to the RCS. Moreover, the HPIS can be used to remove heat from the reactor core if the steam generators were completely unavailable. Under normal conditions the HPIS function is performed by injection through the

valves V_3 and V_5 but, for redundancy, crossover valves V_4, V_6 and V_7 provide alternative flow paths if some failure were to occur in one of the nominal paths.

This stand-by safety system has to be inspected periodically to test its availability. The test interval (TI) specified by the technical specifications (TS) both for the pumps, and the valves is 2190 h. In this study the system components have been divided in three groups characterized by different test strategies. All the components belonging to a same group undergo testing with the same periodicity. The groups identified through the test period T^i, i=1,2,3, are : $T^1 = (V_1, V_2)$; $T^2 = (P_A, P_B, P_C, V_3, V_5)$; $T^3 = (V_4, V_6, V_7)$. Assuming a mission time of one year, the range of variability of the three TIs is [0,8760] hours. Therefore, any solution to the optimization problem can be encoded using the following array of decision variables: $\mathbf{x} = \{T^1, T^2, T^3\}$.

The goal of the work is to optimize the effectiveness of the TIs of the HPIS with respect to three different criteria: i) mean availability, ii) cost and iii) workers' time of exposure to radiation. The TIs then represent the decision variables of the optimization problem and different choices of their values will lead to different performances with respect to the three above mentioned objectives.

To compute the system unavailability we have developed the fault tree for the top event "no flow out of both injection paths A and B" (here not reported for brevity). The boolean reduction of the corresponding structure function has allowed us to determine the system minimal cut sets (MCS) and from these we can compute the mean system unavailability $\overline{U}$ as a function of the elementary unavailabilities of the components in the MCS. As for the mean unavailability $\overline{u}_i$ of a generic individual component i, several models have been proposed in the literature to account for the different contributions coming from failure on demand, human errors, maintenance etc. In this study the following model is assumed [1,18]:

$$\overline{u}_i = \rho_i + \frac{1}{2}\lambda_i \tau_i + (\rho_i + \lambda_i \tau_i)\frac{d_i}{\tau_i} + \frac{t_i}{\tau_i} + g_0 \qquad (1)$$

where: ρ_i= probability of failure on demand; λ_i = failure rate for i-th component; τ_i= test interval for i-th component; t_i = mean downtime due to testing; d_i = mean downtime due to corrective maintenance; g_0 = probability of human error. Equation 1 is valid for $\rho < 0.1$ and $\lambda\tau < 0.1$ which are reasonable assumptions when considering safety systems. The relevant parameters' values are taken from [1] and [18].

For the cost objective C, we assume that it is the sum of two major contributions: i) $C_{S\&M}$ =costs associated with surveillance and maintenance (S&M); ii) $C_{accident}$=costs associated with consequences related to accidents possibly occurring at the plant. For a given component *i* the S&M costs are computed on the basis of given yearly inspection ($C_{ht,i}$) and corrective maintenance ($C_{hc,i}$) costs.

For a given mission time, T_M, the number of inspections performed on component *i* are T_M/τ_i; of these, on average, a fraction equal to $(\rho_i + \lambda_i \tau_i)$ demands also a corrective maintenance action. Thus the surveillance and maintenance costs amount to:

$$C_{S\&M} = \sum_{i=1}^{N_C}\left[C_{ht,i}\cdot\left(\frac{T_M}{\tau_i}\right)\cdot t_i + C_{hc,i}\cdot\left(\frac{T_M}{\tau_i}\right)\cdot d_i\cdot(\rho_i + \lambda_i\tau_i)\right] \qquad (2)$$

As for what concerns the accident costs contribution, $C_{accident}$, this is intended to measure the costs associated to damages of accidents which are not mitigated due to the HPIS failing to intervene. A proper analysis of such costs implies that we account for the probability of the

corresponding accident sequences. To this aim we have referred to a small LOCA event tree found in literature [10]. Actually, the HPIS plays an important role in many other accident sequences generating from other initiators such as intermediate LOCA, station blackout, turbine trip etc. In our example, for simplicity we consider only the contribution due to small LOCAs, recognizing that by so doing we significantly underestimate the accident cost contribution related to the HPIS. The characteristics of the plant damages states (PDS) resulting from the various small LOCA accident sequences and the economic damages of the associated consequences were also taken from [10]. The accident sequences considered for the quantification of the accident costs are those which involve the failure of the HPIS. These costs obviously depend on the initiating event frequency and on the unavailability values of the safety systems which ought to intervene along the various sequences: these values are taken from the literature [10,19] for all systems except for the SDC and MSHR, which were not available and were arbitrarily assumed of the same order of magnitude of the other safety systems, and for the HPIS for which the unavailability is calculated as above explained and which depends on the test intervals of the components. Finally, for the accident costs associated to the relevant plant damage states we adopted the mean value of the uniform ditributions given in Ref. [10]. Table 1 summarizes the input data.

Frequency of small LOCA (y^{-1}) [13]	2.43×10^{-5}
Frequency of Reactor Trip failure (y^{-1}) [23]	3.6×10^{-5}
Frequency of LPIS failure (y^{-1}) [23]	9×10^{-3}
Frequency of SDC failure (y^{-1})	5×10^{-3}
Frequency of MSHR failure (y^{-1})	5×10^{-3}
Mission time (h)	8760
Cost associated to PDS 1 ($\$ \times event^{-1}$) $= C_{PDS1}$	2.1765×10^{9}
Cost associated to PDS 3 ($\$ \times event^{-1}$) $= C_{PDS3}$	1.375×10^{8}

Table 1: Safety systems failure frequencies and PDSs costs for sequences involving the HPIS failure

During testing operations, the technicians may be subjected to radiation exposure. With reference to the ICRP recommendation n° 60 [20], based on the well known ALARA (As Low As Reasonably Achievable) and limit-dose principles, the dose received by workers should be minimized. Assuming a constant exposure rate, the minimization of the dose is equivalent to that of the exposure time, so that the third objective function of our optimization problem can be assumed to be

$$T_{\exp} = \sum_{i=1}^{N_C} \left[\left(\frac{T_M}{\tau_i} \right) \cdot t_i + \left(\frac{T_M}{\tau_i} \right) \cdot d_i \cdot \left(r_i + l_i t_i \right) \right] \qquad (3)$$

with the same meaning of the symbols explained in the previous subsections.
Expression (3) is similar to that of Eq. (3) for the surveillance and maintenance costs, $C_{S\&M}$. However, the presence of the accident contribution in the cost objective function is such that exposure time and cost are generally two distinct objectives to be optimized separately.

An analysis of the three objective functions hereby defined shows that they all share some common contributions but present some conflicting ones as well. For example, the cost function has a contribution relating to the unavailability of the HPIS due to economic damages of occurring accidents and a contribution associated to the time of surveillance and maintenance (and thus of exposition) due to the costs of such operations. On the other hand, the surveillance and maintenance time influences also the mean system unavailability, through the downtimes of the inspected components.

The goal of the work is that of utilizing the multiobjective genetic algorithm optimization procedure to determine the optimal values of inspection intervals, T^i, i=1, 2, 3 for the three groups of components identified in the HPIS, which maximize separately the three objective functions: average availability ($\overline{A} = 1 - \overline{U}$), reciprocal of the cost ($\frac{1}{C}$) and reciprocal of the exposure time ($\frac{1}{T_{\exp}}$). The decision variables of the optimization are then the three test intervals T^i, i=1, 2, 3. Such test intervals are assumed to vary in the range [1, 8760]h so that at least one inspection on each component is carried out in one year. Each of the variables is coded by one 10-bit gene in the chromosome. The data relevant for the multiobjective genetic algorithm procedure contained in Table 2 have been selected after appropriate tuning and constitute the input to the MOGA code.

Number of chromosomes (population size, N_p)	100
Number of generations (termination criterion)	500
Selection	Standard Roulette
Replacement	Weakest
Mutation probability	0.005
Crossover probability	1
Number of non-dominated chromosomes in the archive	400

Table 2: Genetic Algorithm parameters and rules

Figure 2 shows the results obtained through the genetic algorithm procedure for maximizing the three objective functions of mean unavailability, reciprocal of costs and reciprocal of exposure time, simultaneously. In the Figure, we report the values of the objective functions in correspondence of all the nondominated solutions (triplets of TIs) contained in the archive at convergence. These results certainly constitute a more informative set which the designer can handle for a more informed decision, free of a priori constraints or arbitrary weights.

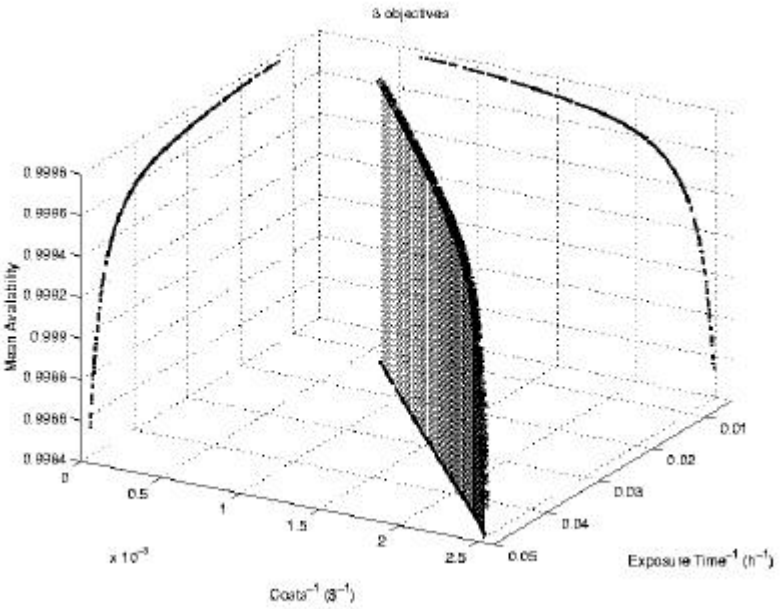

Figure 2: Multiobjective optimization results

It is clear that there exists a linear relationship between cost and exposure time. This is due to the fact that the safety systems failure frequencies and accidental costs are such that the contribution to cost due to accidents is negligible compared to that of surveillance and maintenance, which, in turn, is proportional to the surveillance and maintenance time and, thus, to exposure time. Finally, the test intervals in the genetic algorithm's archive (here not reported for brevity) give an indication that the HPIS can indeed be made more available, on average, by increasing the frequency of the inspections but, as reasonable, this leads to large inspectors' exposure times and also renders the system more expensive. A thorough analysis of the results in the archive also shows that T^1 is somewhat dominant, as expected since it governs the inspections on the two valves V_1 and V_2 which constitute the most critical MCS of the system.

4. CONCLUSIONS

In this paper we proposed to perform a multiobjective optimization by means of genetic algorithms. The genetic algorithm adopted considers a population of chromosomes, each one encoding a different solution to the optimization problem. For a given solution, there are more than one objective to be evaluated so that the performance of any given candidate solution is evaluated introducing the concepts of Pareto optimality and dominance.

The proposed multiobjective genetic algorithm approach has been applied for determining the optimal test intervals of the components of a safety system in a nuclear power plant. The optimization performed with respect to availability, economic and workers' safety objectives has shown the potentials of the approach and the benefits which can derive from a more informative multiobjective framework.

As a final remark we underline the fact that although more informative, Pareto optimality does not solve the decision problem. The decision maker is provided the whole spectrum of nondominated alternatives, and their performances with respect to the objectives, and he or she must ultimately select the preferred one according to his or her preference values. Thus,

the closure of the problem must still rely on techniques of decision making such as utility theory, multi-attribute value theory or fuzzy decision making, to name a few.

References

[1] Martorell S,Carlos S,Sanchez A,Serradell V. Constrained optimization of test intervals using a steady-state genetic algorithm. Reliab Engng Sys Safety 2000; 67: pp. 215-232

[2] Cantoni M, Marseguerra M, Zio E. Genetic algorithms and Monte Carlo simulation for optimal plant design, Reliability Engineering and System Safety 68 (2000) 29-38

[3] Vaurio JK. Optimization of test and maintenance intervals base on risk and cost. Reliab Engng Sys Safety 1995; 49: pp. 23-36

[4] Holland JH. Adaptation in natural and artificial system. Ann Arbor, MI: University of Michigan Press, 1975

[5] Goldberg DE. Genetic Algorithms in Search, Optimization, and Machine Learning. Addison-Wesley Publishing Company, 1989

[6] Beasly D, Bull D, Martin R. An overview on genetic algorithms: Part 1. Fondimentals. University Computing 1993; 15(2): 58-69

[7] Beasly D, Bull D, Martin R. An overview on genetic algorithms: Part 2. Research topics. University Computing 1993; 15(4): 170-81

[8] Fogel D. An introduction to simulated evolutionary optimization. IEEE Transactions on Neural Networks 1994; 15(1): 3-14

[9] Herrera F, Vergeday JL, editors. Genetic algorithm and soft computing Heidelberg. : Ohysica-Verlag, 1996

[10] Yang J-E,Hwang M-J, Sung T-Y, Jin Y.Application of genetic algorithm for reliability allocation in nuclear power plants.Reliab Engng Sys Safety 1999;65:229-238

[11] Painton L, Campbell J. Genetic algorithms in optimization of system reliability. IEEE Trans Reliab 1995; 44(2): 172-8

[12] Coit DW, Smith AE. Reliability optimization of series-parallel systems using a genetic algorithm. IEEE Trans Reliab 1996; 45(2): 254-60

[13] Munoz A, Martorell S, Serradell V. Genetic algorithms in optimizing surveillance and maintenance of components. Reliab Engng Sys Safety 1997; 57: 107-20

[14] Marseguerra M., Zio E. Optimizing maintenance and repair policies via a combination of genetic algorithms and Monte Carlo simulation, Reliab Engng Sys Safety 68 (2000) 69-83

[15] Parks G.T., Multiobjective pressurized water reactor reload core design using genetic algorithm search. Nuclear Science and Engineering: 1997,124, pp. 178-187

[16] Toshinsky, V.G., Sekimoto H., and G.I. Toshinsky A method to improve multiobjective genetic algorithm optimization of a self-fuel-providing LMFBR by niche induction among nondominated solutions. Annals of Nuclear Energy 2000; 27: 397-410

[17] Harunuzzaman M., Aldemir T. Optimization of standby safety system maintenance schedules in nuclear power plants. Nuclear Technology 1996; 113: 354-67

[18] G. Apostolakis, T.L. Chu. The unavailability of systems under periodic test and maintenance. Nuclear Technology 1980; 50: 5-15

[19] N.R.C. U. S. Nuclear Regulatory commission. Rates of initiating events at United States nuclear power plants: 1987-1995. NUREG/CR-5750

[20] ICRP Publication 60. 1990 recommendations of the International Commission on Radiological Protection. Annals of the ICRP Vol. 21, No. 1-3; (1991) Pergamon Press.