Fuzzy Autopilot Design Using A Multiobjective Evolutionary Algorithm

Anna L. Blumel
Dept. of Aerospace, Power & Sensors,
Cranfield University,
Royal Military College of Science,
Shrivenham, England.
A.L.Blumel@rmcs.cranfield.ac.uk

Evan J. Hughes
Dept. of Aerospace, Power & Sensors,
Cranfield University,
Royal Military College of Science,
Shrivenham, England.
ejhughes@iee.org

Brian A. White
Dept. of Aerospace, Power & Sensors,
Cranfield University,
Royal Military College of Science,
Shrivenham, England.
B.A.White@rmcs.cranfield.ac.uk

Abstract- This paper details a Fuzzy - Feedback Linearisation controller applied to a non-linear missile. The design uses an evolutionary algorithm optimisation approach to a multiple model description of the airframe aerodynamics. A set of convex models is produced that map the vertex points in a high order parameter space (of the order of 16 variables). These are used to determine the membership function distribution within the outer loop control system by using a multi-objective evolutionary algorithm. This produces a design that meets objectives related to closed loop performance such as: steady state error, overshoot, settling and rising time. The evolutionary algorithm uses non-dominated sorting for forming a Pareto front of possible solutions. This paper shows that fuzzy controllers can be produced for engineering problems, with the multiobjective algorithm allowing the designer the freedom to choose solutions and investigate the properties of the system.

1 Introduction

The problem considered here is that of tracking a trajectory in the presence of noise and uncertainty. Many nonlinear analysis problems of engineering interest can be reduced to such a problem. Since the real system is not exactly the one used for the design, and since it is also subject to noise, the system will not follow the intended trajectory. Then the question of interest becomes: will the real trajectory, under the worst conditions possible, remain close enough to the nominal one. This could be defined as a robust trajectory tracking problem. Here, this kind of problem is addressed for a highly non-linear missile when the design of an autopilot is taken into account. Although such systems are well defined in terms of their dynamic behaviour, they have large uncertainty in their parameters and can cover large ranges of altitude and speed (see figure 1). By demanding small changes in system outputs, it is possible to exhibit the non-linear behaviour of the system, then a robust non-linear control technique is required to achieve good performance.

The aim of this paper is to track the missile lateral acceleration demand in the presence of uncertainties introduced through the aerodynamic coefficients. The g demands are considered for both pitch and yaw planes, using the missile rudder and elevator as control surfaces hence yielding a system with 2 inputs and 2 controlled outputs.

It has been shown previously [1] that by applying feedback Linearisation the desired tracking performance can be obtained by assuming an exact knowledge of aerodynamic coefficients and missile configuration parameters (i.e., reference area, Mach number, mass, moment of inertia) in the entire flight envelope. In practice however, this assumption is not valid and also, if there are either parameter variations or external disturbances, feedback-Linearisation can no longer guarantee the desired performance (neither is robustness guaranteed).

Figure 1: Highly nonlinear manoeuvre

Conversely fuzzy logic theory is useful when dealing with vague and imprecise information such as uncertain measurement values, parameter variations and noise [2]. In previous research [3] a combination of an input/output linearisation technique (nonlinear control law) and a fuzzy logic trajectory controller have been considered.

This paper uses an evolutionary algorithm optimisation approach to a multiple model description of the airframe aerodynamics. This is used to determine the membership function distribution within the outer loop control system by using a multi-objective evolutionary algorithm that meets objectives related to closed loop performance such as: rising and settling time, steady state error, and overshoot.

2 HORTON Missile model

The missile model used in this study derives from a non-linear model produced by Horton of Matra-British Aerospace [4]. It describes a 5 DOF model in parametric format with severe cross-coupling and non-linear behaviour. This study has considered the reduced problem of a 4 DOF controller for the pitch and yaw planes without roll coupling. The angular and translational equations of motion of the missile airframe are given by:

$$\begin{aligned}
\dot{q} &= \frac{1}{2}I_{yz}^{-1}\rho V_o S d(\frac{1}{2}dC_{mq}q + C_{mw}w + V_o C_{m\eta}\eta) \\
\dot{w} &= \frac{1}{2m}\rho V_o S(C_{zw}w + V_o C_{z\eta}\eta) + Uq \qquad (1) \\
\dot{r} &= \frac{1}{2}I_{yz}^{-1}\rho V_o S d(\frac{1}{2}dC_{nr}r + C_{nv}v + V_o C_{n\zeta}\zeta) \\
\dot{v} &= \frac{1}{2m}\rho V_o S(C_{yv}v + V_o C_{y\zeta}\zeta) - Ur \qquad (2)
\end{aligned}$$

where the axes(x, y, z), rates(r, q) and velocities (v, w) are defined in (Figure 2).

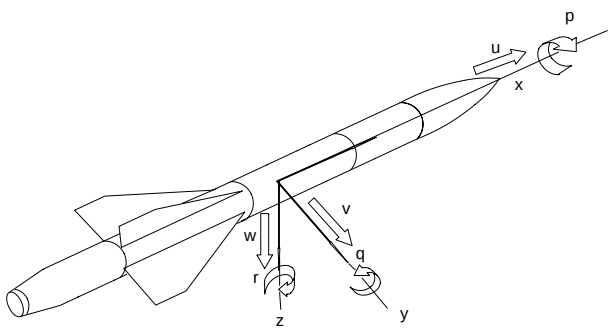

Figure 2: Airframe axes

Equations (1,2) describe the dynamics of the body rates and velocities under the influence of external forces (e.g. C_{zw}) and moments (e.g. C_{mq}), acting on the frame. These forces and moments, derived from wind tunnel measurements, are non-linear functions of Mach number, longitudinal and lateral velocities, control surface deflection, aerodynamic roll angle, and body rates.

The aerodynamic coefficients: C_{yv}, $C_{y\zeta}$, x_{cp}, and C_{nr} are presented by polynomials shown in Table 1. These polynomials are fitted to the set of curves taken from look-up tables for different flight conditions. The table is a set of curves in the plane of total incidence σ in $[rads]$ and Mach number M. In the table the c_{yv} polynomials present the *normal force* curves, the x_{cp} present the *centre of pressure* curves, c_{yz} present the *rudder and elevator control forces* curves, and finally the c_{nr} present the *damping yawing and pitching moments* curves which are reasonably proportional to body rates.

The highly non-linear nature of the aerodynamic coefficients for different flight conditions are shown in details ([5]) and the carpet plot for one of them (for example x_{cp}) is shown in figure 3 plotted as a function of Mach number and roll angle for different incidence angles (σ).

Normal force	$C_{yv} = -25 + 1.0M - 60\sigma$
Control surfaces	$C_{y\zeta} = -10 - 1.6M + 2.0\sigma$
Centre of pressure	$X_{cp} = 1.3 + 0.1M + 0.2\sigma$
Damping moment	$C_{nr} = -500 - 30M + 200\sigma$

Table 1: Roll angle = $0°$

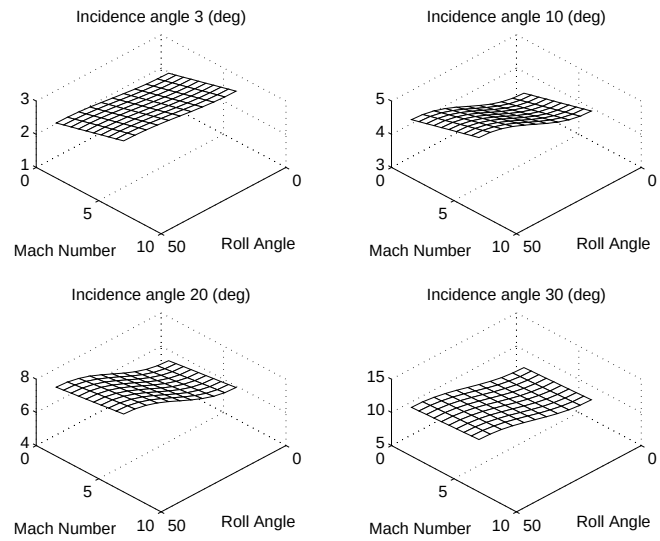

Figure 3: x_{cp} for different flight conditions

The description of the model is obtained from data supplied by Matra-BAE and detailed in the Horton report [6]. As both horizontal and vertical lateral motion is symmetric in format, both will be dealt with together, taking into account the appropriate sign changes in derivatives for each lateral direction.

The control of the missile will be accomplished in this paper by controlling lateral velocity. The dynamic equation (2) for lateral velocity can be derived further as follows:

$$\begin{aligned}
\dot{v} &= V^o(C_{yv}v + V_o C_{y\zeta}\zeta) - Ur \\
&= V^o[(C_{yv_0} + C_{yv_M}M + C_{yv_\sigma} \mid \sigma \mid)v \\
&\quad + V_o(C_{y\zeta_0} + C_{y\zeta_M}M + C_{y\zeta_\sigma} \mid \sigma \mid)\zeta] - Ur \\
&= V^o[(\bar{C}_{yv_0}v + \bar{C}_{yv_\sigma} \mid v \mid v \\
&\quad + V_o\bar{C}_{y\zeta_0}\zeta + V_o\bar{C}_{y\zeta_\sigma} \mid v \mid \zeta] - Ur \qquad (3)
\end{aligned}$$

where the Mach number M, and the total velocity V_o are slowly varying and where:

$$\mid \sigma \mid = \frac{\mid v \mid}{V_o}\frac{180}{\pi}$$

$$
\begin{aligned}
M &= \frac{V_o}{SoS} \\
V^o &= \frac{1}{2m}\rho V_o S \\
\bar{C}_{yv_0} &= C_{yv_0} + C_{yv_M}\frac{V_o}{SoS} \\
\bar{C}_{yv_\sigma} &= C_{yv_\sigma}\frac{180}{V_o\pi} \\
\bar{C}_{y\zeta_0} &= C_{y\zeta_0} + C_{y\zeta_M}\frac{V_o}{SoS} \\
\bar{C}_{y\zeta_\sigma} &= C_{y\zeta_\sigma}\frac{180}{V_o\pi}
\end{aligned} \tag{4}
$$

The state-space form of the non-linear system of the missile is written in a matrix form:

$$
\begin{aligned}
\dot{x} &= f(x) + g(x)u \\
y &= h \\
&= \begin{bmatrix} h_1 \\ h_2 \end{bmatrix} = \begin{bmatrix} x_1 \\ x_3 \end{bmatrix}
\end{aligned} \tag{5}
$$

For the selected outputs (lateral velocities) an approximate input-output linearisation has been applied in our previous work [1]. A combination of neglecting sufficiently small terms during the differentiation process and proposing an output that is an approximation of the desired one has been used which has resulted in a linear equivalent system with total relative degree equal with the order of the system. This means there is no part of the system dynamics which is rendered "unobservable" in the approximate input-output linearisation. Since there is no internal (zero) dynamics the stability of the linearised system can be guaranteed and the tracking problem is solved [7] .

The effect of neglecting small terms (the side-slip force acting on the control surfaces) in the g vector field is to eliminate a non-linear zero in the system within the model description, and which is not taken into account in the non-linear control design. It has been shown in [5] that provided the side-slip force is not too great this will not affect the performance of the control design in a significant manner.

The required static state feedback for decoupled closed loop input/output behaviour is given by [7] as:

$$
u = E^{-1}\left\{ v - \begin{bmatrix} \alpha_1 \\ \alpha_2 \end{bmatrix} \right\} \tag{6}
$$

where E^{-1} is the decoupling matrix of the system and it is nonsingular.

After applying the feedback linearisation technique the linearised closed loop system can be written as:

$$
\ddot{y}_i = v_i \tag{7}
$$

where v is the new linearised system input.

It has been shown [1] that the desired tracking performance for lateral acceleration can be obtained by assuming an exact knowledge of aerodynamic coefficients and missile configuration parameters (i.e., reference area, Mach number, mass, moment of inertia). In practice however, this assumption is not valid and also, if there are parameter variations or external disturbances, feedback-linearisation can no longer guarantee the desired performance or neither is robustness guaranteed. For these reasons, a combination of an input/output linearisation technique (nonlinear control law) and a fuzzy logic controller (trajectory controller) have been chosen to be considered here.

3 Multi-modelling: Sensitivity Analysis

The variations in aerodynamic coefficients have introduced parametric uncertainties into the non-linear system.

It has been found that some coefficients can be allowed larger percentage variation from the nominal case than others. Within the system we are able to tolerate $\pm 50\%$ uncertainty in c_{yz}, c_{yv}, c_{nr} before it goes unstable.

Also for a range of $\pm 25\%$ change, the aerodynamic coefficient C_{yv} can vary before the side-slip velocity exceeds 10% steady state error within the feedback linearised loop. For similar performance, C_{yz} can vary by $\pm 15\%$, and the most sensitive coefficient, X_{cp}, can vary by $\pm 1.5\%$.

The centre of pressure coefficient x_{cp} and the control surfaces c_{yz} polynomials have most significant effect on the close loop performance (the system is very sensitive to small changes) while the damping moment contribution in c_{nr} is small and the system is almost insensitive so can be simplified to be independent of aerodynamic roll angle.

The sign of x_{cp} can tell us whether the system is stable or not. When the σ term of x_{cp} is varied to around $+50\%$ change we get an unstable system.

In a real flight scenario, for every instance of this missile type, the aerodynamical functions may deviate from their nominal values, taken in wind tunnel measurements. In order to explore the complexity of the problem we have assessed the open and closed loop system for different autopilot demands by computing the lateral acceleration and side-slip velocity errors. For simplicity we have studied the single plane (lateral or vertical motion) when roll angle is $0°$.

4 Fuzzy trajectory controller

The autopilot design shown in figure 4 consists of the missile dynamics presented by

$$
\begin{aligned}
\dot{x} &= f(x) + \triangle f(x) + (g(x) + \triangle g(x))u \\
y &= h(x)
\end{aligned} \tag{8}
$$

which presents the multi-modelling frame. A fast $250[rads/sec]$ second order linear actuator is included within the missile dynamics. Fin angles and fin rates are states of the system. The non-linear control law is $\frac{\nu-\alpha}{\beta}$, derived by the feedback linearisation technique, which decouples the system. Two fuzzy logic trajectory controllers are used in the

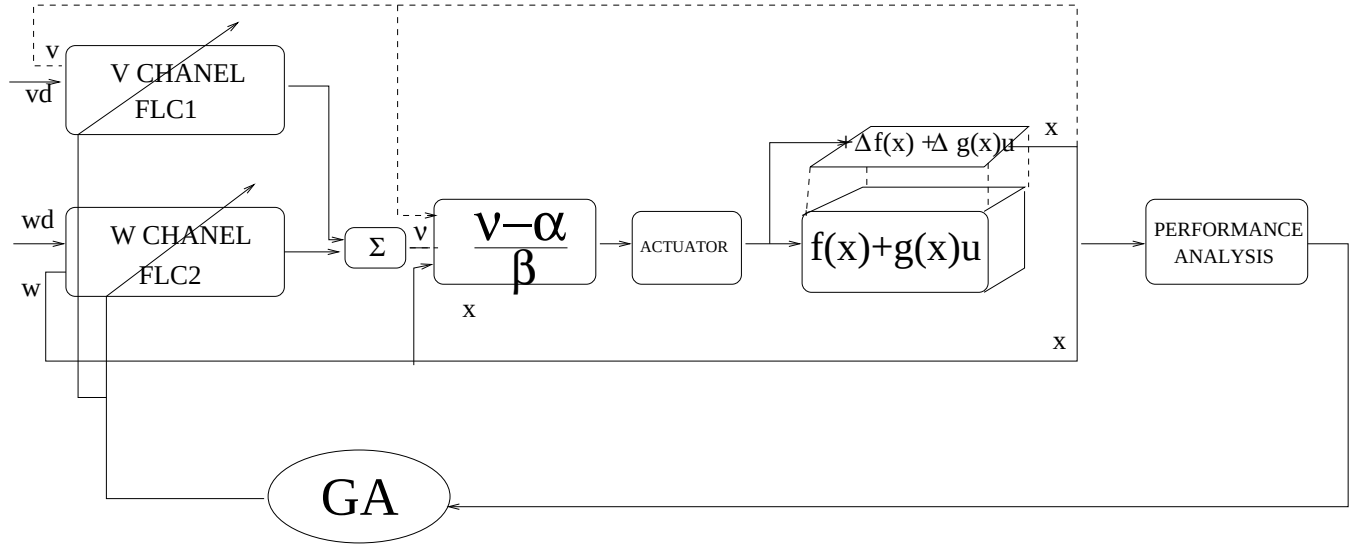

Figure 4: Trajectory control design

outer loop for the lateral v, and vertical w channels respectively. An optimisation procedure is used to tune the membership functions and the rules of the Fuzzy Logic Controller. The fixed gains used in the design of the nominal model correspond to natural frequency $w_n = 50(rad/sec)$ and damping factor $\zeta = 0.7$ of the closed loop system.

The trajectory controller has been designed, based on a fuzzy inference engine, as a two input - one output system with five membership functions for each variable. The membership functions' positions and the rules are generated using an evolutionary algorithm.

5 Evolutionary Algorithm Structure

The proposed framework maintains a population of fuzzy rule sets with their membership functions and uses the evolutionary algorithm to automatically derive the resulting fuzzy knowledge base.

A hybrid real valued/binary chromosome has been used to define each individual fuzzy system. Figure 5 shows the chromosome structure for a four membership function system (for clarity). In this work we actually used five member functions for each of the inputs and the output. The real valued parameters are defined as being the $[\delta a\, \delta b\, \delta c\, \delta d]$ and lie in the range $(0, 1]$. The binary component encodes the set of rules used in the system. Each rule is either on or off (0/1) and corresponds to the form:

$$\text{if } A_i \text{ AND } B_j \text{ then } O_k \tag{9}$$

where A_i denotes membership function i of input A, B_j denotes membership function j of input b, and O_k denotes membership function k of the output O. This process allows a full set of rules to be developed for the fuzzy system, but maintains a fixed length chromosome. The five membership function structure leads to a chromosome with 12 real valued genes and 125 binary genes. The fuzzy system used product for the member function 'AND'. The 'OR' function was not required as the rules were all expressed as 'AND' terms. The implication method was to chose the minimum value and crop the output member functions. The aggregation method was to choose the maximum values of the set of member functions. A centroid approach was used to defuzzify the output.

The evolutionary algorithm[8] follows the usual format of ranking, selection, crossover, mutation and evaluation but with the real and binary parts of the chromosomes being processed separately. A multi-objective approach was used to identify good solutions. A method known as non-dominated ranking was used in the evolutionary algorithm to allow the multi-objective problem to be handled easily. A detailed description of the non-dominated ranking process may be found in [9], and is based on several layers of classifications of the individuals. To classify the individuals, the population is ranked on the basis of non-domination: all non dominated individuals are classified into one category and given a dummy fitness value, which is proportional to the population size, to provide an equal reproductive potential for these individuals. To maintain the diversity of the population, these classified individuals are shared using their dummy fitness values, based on relative chromosome vectors. Then this group of classified individuals is ignored and another layer of non dominated individuals is considered. The process continues until all individuals in the population are classified.

A population of 100 individuals was maintained by the algorithm. Each generation, 20 individuals were selected for breeding. Crossover was performed at a rate of 0.9, with intermediate crossover being used for the real values and uniform multi-point crossover for the binary part. A mutation rate of $2/137$ was used. Selective pressure (SP) of 1.7 is used. The high crossover and low selective pressure is to slow convergence to help prevent local optimum being exploited. The

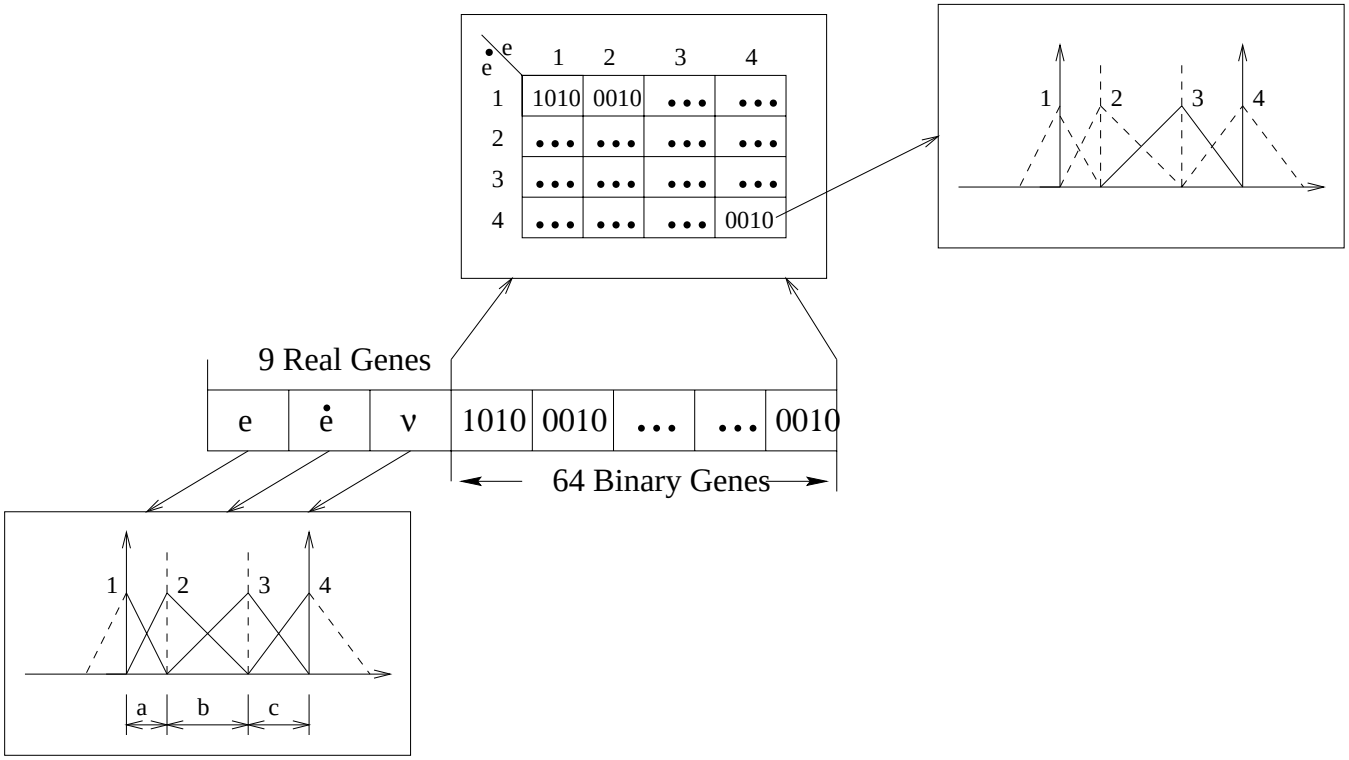

Figure 5: FLC chromosome structure (4 member functions)

twenty new individuals were evaluated and then concatenated to the old population, forming a set of 120 individuals. Non-dominated ranking was then applied to this set and the best 100 were taken for the next generation.

In this application much of the feasible space of the controller is little used (see the results section). The genes responsible for these areas will settle to some semi-random state. That is why sometimes solutions having very similar used control surfaces may have very different chromosomes. This feature upsets the sharing process. A token value of $\sigma_{share} = 0.5$ was used, because varying σ_{share} has little effect in this application.

Stochastic universal sampling is used to select good individuals from the population for breeding. Since individuals in the first front have the maximum fitness value, they are more likely get more copies than the rest of the population. This allows the algorithm to search for non-dominated regions, and results in convergence of the population toward such regions. The main strengths of the non-dominated ranking technique is that it can handle any number of objectives independently. The population in the final generation will be mainly non-dominated.

6 Optimistic Reference point approach

Depending on how we consider the objectives will affect the Evolutionary algorithm behaviour in terms of convergence and searching through feasible regions for acceptable solutions. Previously [3] we have used the surrogate additive function which transfers the vectorised multi-objective problem into a scalar optimisation problem.

One way to explore this problem is to define closed loop performance criteria as four objectives by using the reference point approach [10]. Other researchers [11], [12] have applied similar ideas by using goal attainment method to a gas turbine engine model.

The tradeoff information generated by the evolutionary algorithm can contribute to a better understanding of the complexity of the problem. Generally the objective criteria are incomparable and the numerical values may differ considerably. This can make the tradeoff plots difficult to view. A procedure for normalisation must be used to convert the criteria $y_j(\mathbf{x})$ into a dimensionless function $\eta_j(\mathbf{x})$ for which usually $\eta_j(\mathbf{x}) \in [\mathbf{0}, \mathbf{1}]$.

The optimistic reference point approach [10],[13] known also as using a function of losses represents the losses from the ideal values $y_j^\star$ for the objectives:

$$\eta_j(\mathbf{x}) = \frac{\mathbf{y_j^\star} - \mathbf{y_j}(\mathbf{x})}{\mathbf{y_j^\star}}, \mathbf{j} \in [\mathbf{1}, \ldots, \mathbf{m}]. \tag{10}$$

If the ideal values $y_j^\star$ are very small numbers or $y_j^\star \longrightarrow 0$, an alternative form can be used

$$\eta_j(\mathbf{x}) = \frac{\mathbf{y_j^\star} - \mathbf{y_j}(\mathbf{x})}{\mathbf{y_{jmax}} - \mathbf{y_{jmin}}}, \mathbf{j} \in [\mathbf{1}, \ldots, \mathbf{m}]. \tag{11}$$

Where y_{jmax} and y_{jmin} are respectively the maximum

and minimum values of the criterion $y_j(\mathbf{x})$ in $\mathbf{x}$ in X. X is the set of feasible solutions and a proper subset of the solution space $\mathcal{R}^m$.

This approach is called *optimistic*, because the most desired values $y_j^\star$ for the objectives in equation 10 are chosen. This is applied to all four closed loop performance criteria: rising time, steady state error, overshoot and settling time.

The closed loop performance criteria are chosen as following:

- Side-slip velocity steady state error:

$$\eta_1(x) = \frac{Er^\star - Er(\mathbf{x})}{Er_{max} - Er_{min}} \tag{12}$$

- Overshoot:

$$\eta_2(x) = \frac{Os^\star - Os(\mathbf{x})}{Os_{max} - Os_{min}} \tag{13}$$

- Rise time:

$$\eta_3(x) = \frac{Tr^\star - Tr(\mathbf{x})}{Tr_{max} - Tr_{min}} \tag{14}$$

- Settling time:

$$\eta_4(x) = \frac{Ts^\star - Ts(\mathbf{x})}{Ts_{max} - Ts_{min}} \tag{15}$$

Table 2 shows the reference points used in the objective calculations.

7 Results

The fuzzy surface has been developed with the model exercising the nominal aerodynamic coefficients. The fuzzy logic controller has been tuned for the nominal case of the aerodynamical coefficients, demand $2.57[m/sec]$ corresponding to 1g pull lateral acceleration, and tested for parameter variations within the ranges specified in section 3. Two particular combinations of variation have been used:

1. $[\ C_{yv_{min}} \quad C_{yz_{min}} \quad C_{nr_{max}} \quad X_{cp_{max}}\ ]$
2. $[\ C_{yv_{max}} \quad C_{yz_{min}} \quad C_{nr_{max}} \quad X_{cp_{min}}\ ]$

Robust performance to these errors within less than 5% relative steady state error has been achieved.

In a typical run, about 80% of the solutions in the final population are non-dominated. Figure 6 shows the tradeoff plot for three of the non-dominated solutions. Figure 7(a) shows the fuzzy surface of a trajectory controller generated by the evolutionary algorithm with the paths taken for the nominal (circles) and perturbed cases (dots). This is the controller that delivers the smallest steady state error, but the settling time is faster than required, and there is overshoot. Figure 7(b) shows the side-slip velocity response for the nominal case and two cases with extreme coefficient values (detailed below). The most fired rule (70%) in this solution is when both error and the derivative of the error are zero, which is the steady state area of the response.

Figure 7(c-f) shows the surfaces used and the corresponding side slip velocity responses for the two alternative solutions from the non-dominated set. The solution (c) has very little overshoot, but has a slow rise time and good settling time and is less robust. Solution (e) has a very fast rise time, no overshoot, a good settling time but poor steady state error.

Solutions (a) & (c) have similar surfaces showing a 'winged' pattern. Solution (e) is quite different and has a 'double valley' response.

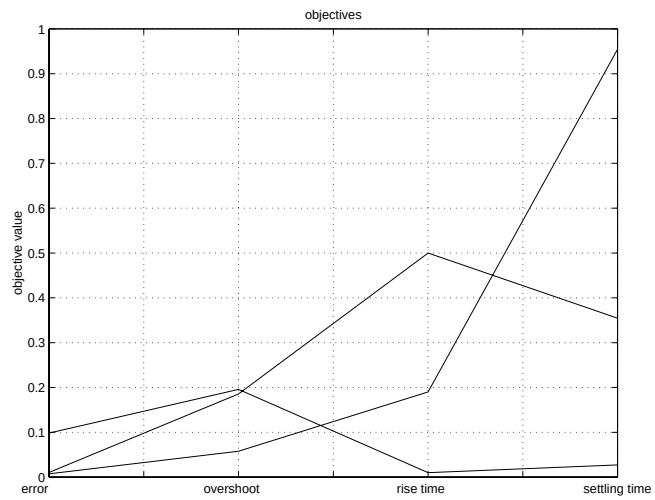

Figure 6: Trade-off plot for three non-dominated solutions.

8 Conclusions

We have evaluated the robustness of feedback linearisation on the significant parametric uncertainty introduced into the system through the aerodynamic coefficients. We have proposed a fuzzy outer loop to improve the robustness. We have shown that the evolutionary algorithms can produce a good set of results that populate the Pareto solution set, allowing the system designer the flexibility of trading one solution against others to achieve a desired performance.

As figure 7 demonstrates, by monitoring the usage of the controller surface, combined with the fuzzy control approach, an insight can be gained into the operation of robust controllers that are created using the evolutionary process.

9 Acknowledgements

The authors would like to thank Matra-BAE for providing the data for the missile model.

Bibliography

[1] A. Tsourdos, A. L. Blumel, and B. A. White, "Trajectory control of a nonlinear homing missile," in *Proc.*

Reference points	Steady State Error	Settling time	Rising time	Overshoot
Ideal point	$Er^\star = 0.0[\%]$	$Ts^\star = 0.15[sec]$	$Tr^\star = 0.08[sec]$	$Os^\star = 4.5[\%]$
Maximum	$Er_{max} = 2.0[\%]$	Ts_{max}=0.25$[sec]$	$Tr_{max} = 0.14[sec]$	$Os_{max} = 25.0[\%]$
Minimum	$Er_{min} = 0.0[\%]$	$Ts_{min} = 0.1[sec]$	$Tr_{min} = 0.07[sec]$	$Os_{min} = 2.0[\%]$

Table 2: Closed loop performance criteria

of the 14th *IFAC Symp. on Aut. Control in Aerospace*, 1998. Korea.

[2] A. Trebi-Ollennu and B. A. White, "Robust output tracking for mimo nonlinear systems: An adaptive fuzzy systems approach," *IEE Proc. Control Theory appl. - Marine Control*, vol. 144, pp. 537–544, 6 1997.

[3] A. L. Blumel, E. J. Hughes, and B. A. White, "Design of robust fuzzy controllers for aerospace applications," in *Proceedings of the 18 NAFIPS Conference*, vol. 1, pp. 438–442, 1998.

[4] M. Horton, "A study of autopilots for the adaptive control of tactical guided missiles," Master's thesis, Univ. of Bath, 1992.

[5] B. A. White, "Non-linear autopilot of the horton and generic missile," tech. rep., Dept. of Aerospace, Power and Sensors, Cranfield University-RMCS, Shrivenham, Wilts, SN6 8LA, October 15 1998.

[6] A. L. Blumel, A. Tsourdos, and B. A. White, "Nonlinear horton missile model," tech. rep., The Royal Military College of Science,Cranfield University, D.A.P.S., R.M.C.S.,C.U., Shrivenham, Wilts, SN6 8LA, September 16 1997.

[7] J. E. Slotine and L. Weiping, *Applied Nonlinear Control*. Prentice Hall, 1991.

[8] A. Zalzala and P. J. Fleming, eds., *Genetic algorithms in engineering systems*. The Institution of Electrical Engineers, 1997.

[9] N. Srinivas and K. Deb, "Multiobjective optimization using nondominated sorting in genetic algorithms," *Evolutionary Computation*, vol. 2, no. 3, pp. 221–248, 1995.

[10] H. R. Weistroffer, "A combined over and underachievement programming approach to multiple objectives decision making," *Journal of Large Scale Systems*, vol. 7, pp. 47–58, May 1984.

[11] C. M. Fonseca and P. J. Fleming, "Multiobjective optimization and multiple constraint handling with evolutionary algorithms-part 1:a unified formulation," *IEEE Transactions on Systems,Man and Cybernetics*, vol. 28, pp. 26–37, January 1998.

[12] C. M. Fonseca and P. J. Fleming, "Multiobjective optimization and multiple constraint handling with evolutionary algorithms - part 2: Application example," *IEEE Transactions on Systems,Man and Cybernetics*, vol. 28, pp. 38–47, January 1998.

[13] H. Weistroffer and S. Narula, "The current state of nonlinear multiple criteria decision making," tech. rep., School of Business, Virginia Commonwealth University, Richmond, Virginia 23284-4000, USA, 1989.

A Nomenclature

x	roll axis
y	pitch axis
z	yaw axis
q	Pitch rate
r	Yaw rate
U	Velocity along the roll axis
v	Velocity along the pitch axis
w	Velocity along the yaw axis
V_o	Total Velocity
η	Elevator angle
ζ	Rudder angle
I_{yz}	Inertia
m	Mass of the airframe
d	Missile diameter
S	Wing chord
ρ	Air density
x_{cg}	Centre of Gravity
x_{cp}	Centre of Pressure
x_f	Fin moment arm
SoS	Speed of sound

B Physical Parameters of the HORTON Missile

Symbol	Meaning	Value
ρ_0	Sea Level Air density	$1.23kg/m^3$
ρ	Air Density	$\rho_0 - 0.094h$
d	Reference diameter	$0.2m$
S	Reference area	$d^2/4 = 0.0314m^2$
m	Mass	$125kg$
I_z, I_y	*Lateral Inertia*	$67.5kgm^2$

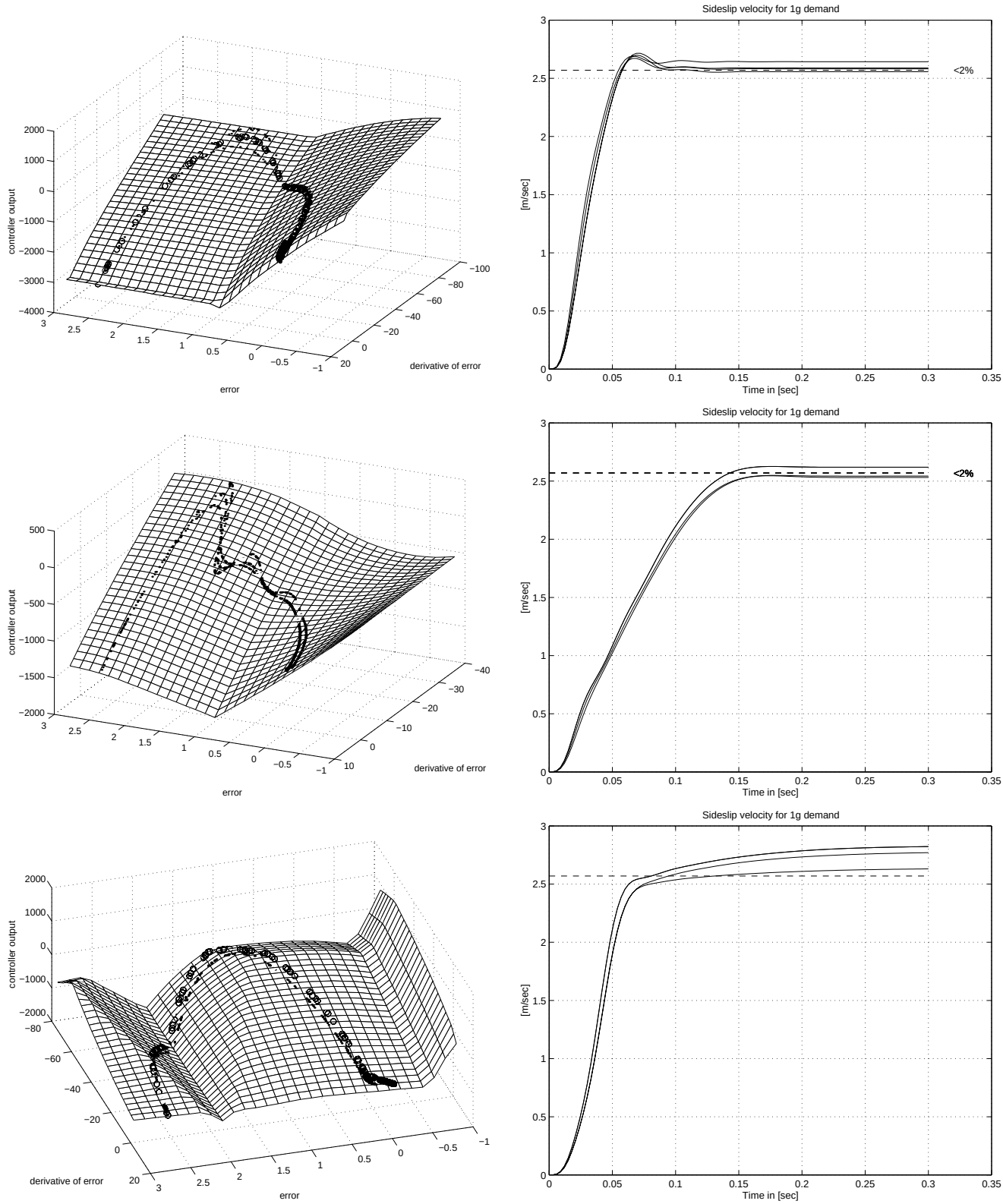

Figure 7: Three alternative Pareto solutions