MULTIOBJECTIVE OPTIMIZATION OF HEAT TRANSFER PLANT USING DECISION TABLE CONTROLER AND GENETIC ALGORITHM

Darko Grundler
Faculty of Textile Technology
Croatia, 10000 Zagreb, Prilaz baruna Filipovica 30
E-mail: Darko.Grundler@sk.tel.hr
http://public.srce.hr/~dgrund
Phone: (++385)(1) 37 03 154 , Fax (++385)(1) 37 74 029

Abstract - A genetic algorithm based procedure for direct decision table adjusting is proposed to solve multiobjective dynamic discrete-time optimal control problem. Multilevel coordinate control is introduced, the task of which is to coordinate and tune the control units according to the multiobjective overall criterion. The optimizing of the cascade process according to the multiobjective overall criterion for the minimal energy consumption and satisfying output constraints is carried out by means of genetic algorithm. The proposed evolutional optimizing procedure of the multiobjective multilevel control is characterized by the simplicity of use and inherent adaptability.

1. Introduction

Although genetic algorithms have been successfully applied to various static optimization problems (Goldberg 1989, Bäck 1992), application of the genetic algorithm to dynamic discrete-time optimal control problems have been only initially studied (Nordvik 1991, Fleming 1993, Varsek 1993, Chipperfield 1995). The main direction of research was to use the genetic algorithm to tune various parameters of fuzzy controller. Most of research efforts to find robust design procedure fall into one of four main fields: selection of scaling factors, derivation of optimal membership functions, elicitation of a rule-base and on-line modification of the rule-base (Pham 1991, Thrift 1991, Renders 1992, Tan 1996). For time-critical applications fuzzy controller is replaced with the decision table controller derived from fuzzy algorithm (Stipanicev 1989). Published results (Eksin 1996, Grundler 1997) indicate that the genetic algorithm can effectively adjust the decision table independently of fuzzy procedure and knowledge about process.

Genetic algorithm based optimizing procedure is proposed to simplify multiobjective optimization procedure for real-world complex process that can be applied to wide range of industrial plants. Mulitobjectivness is part of fitness function and because of that procedure is the same for various multiobjective criteria.

2. Decision table controller

A decision table controller (DTC for short) is a controller which changes its output in regular discrete time instances and whose transfer function is defined by decision table (Grundler 1998, Grundler 1999), Fig. 1.

In this research two-input single-output DTC was used:

$$x_k=f(E_i,DE_j)$$

where x_k is controller output in period from time instance t_k to t_{k+1}, E_i is discrete error in time instance t_k, DE_j is discrete change-in-error in time instance t_k, and f defined with decision table. Continuos values of error E_k and change-in-error DE_k are converted to discrete values E_i and DE_j respectively and used as inputs for decision table. There are four parameters that have to be established in advance for decision table: number of discrete error values N_E, number of discrete change-in-error values N_{DE} (i.e. resolution of error and change-in-error), function f_E ; $E_i=f_E(E_k)$ and function f_{DE} ; $DE_j=f_{DE}(DE_k)$, i.e. distribution of error and change-in-error discrete values. Those parameters are responsibility of algorithm designer and are based upon heuristics of control engineer and algorithm designer.

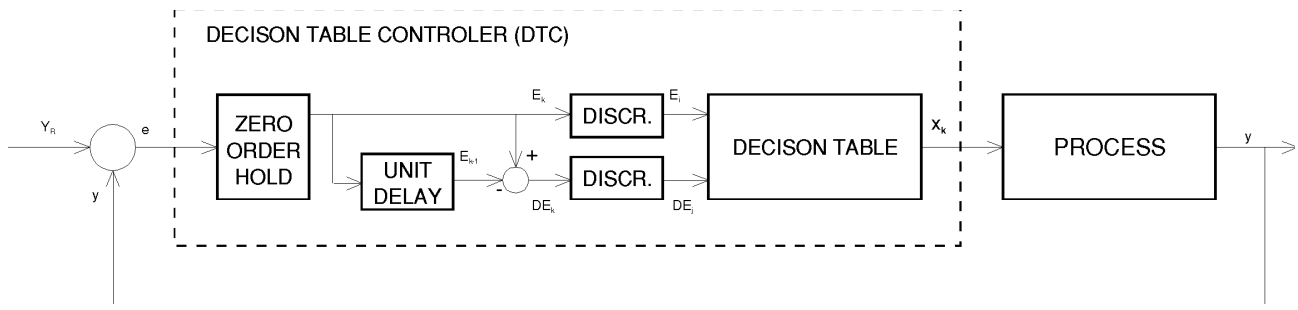

Fig. 1 Decision table controller (DTC)

		ERROR						
CHANGE IN ERROR		E_0	E_1	E_2	E_3	E_4	E_5	E_6
	DE_0	x_{11}	x_{12}	x_{13}	x_{14}	x_{15}	x_{16}	x_{17}
	DE_1	x_{21}	x_{22}	x_{23}	x_{24}	x_{25}	x_{26}	x_{27}
	DE_2	x_{31}	x_{32}	x_{33}	x_{34}	x_{35}	x_{36}	x_{37}
	DE_3	x_{41}	x_{42}	x_{43}	x_{44}	x_{45}	x_{46}	x_{47}
	DE_4	x_{51}	x_{52}	x_{53}	x_{54}	x_{55}	x_{56}	x_{57}
	DE_5	x_{61}	x_{62}	x_{63}	x_{64}	x_{65}	x_{66}	x_{67}
	DE_6	x_{71}	x_{72}	x_{73}	x_{74}	x_{75}	x_{76}	x_{77}

Table 1 Decision table

The decision table discrete error value is defined as:

$$E=E_i \text{ if } LE_{i-1} \le E_k < LE_i \text{ , } i=0(1)(N_E-1),$$

$$DE=DE_j \text{ if } LDE_{j-1} \le DE_k < LDE_j \text{ , } j=0(1)(N_{DE}-1),$$

$$LE_i = \left|E_{max}\right| \cdot \left(-1+\frac{2}{N_E-2}\cdot i\right), \; i=0,1,\ldots,(N_E-2),$$

$$LDE_j = \left|DE_{max}\right| \cdot \left(-1+\frac{2}{N_{DE}-2}\cdot j\right), \; j=0,1,\ldots,(N_{DE}-2),$$

where E_{max} is absolute expected maximal error value and DE_{max} is absolute expected maximal change-in-error value.

In this research: N_E=7, N_{DE}=7, linear decision table distribution was used i.e. LE_{i-1}-LE_i=const., E_{max}=0.3, DE_{max}=0.001 and sampling interval=0.1, were used. Genetic algorithm procedure is used to find optimal decision tables, i.e. to find x_k elements (Tab. 1) for each of two tables simultaneously (98 x_k=x_{ij} parameters to be found). Each controller table element (i.e. x_k parameter) is coded as 8-bit binary string so that the total search space was 2^{784}, which is comparable to number of possible moves in chess game.

3. Plant

The proposed multiobjective multilevel co-ordinate control has been applied to the laboratory plant (Fig. 2). The lab plant consists of the cascade made up of two heat exchangers which are independently controlled and have the same disturbance input. The main task of the control is to maintain the set temperature at the output of the coil of the second tank, regardless of the changes of flowrate in the coil q_{k1u}, that are caused by consumption of the fluid (disturbance) and at the same time to satisfy multiobjective overall criterion. The mathematical model of the process consisting of seven differential and two auxiliary equations has been compared with the lab plant and verified by means of various comprehensive experimental testing (Grundler 1997).

The optimizing of the process according to the multiobjective criteria has been carried out by means of computer simulation based on the mathematical model. Although on-line procedure is possible, this off-line approach was used as it is much quicker to apply the iterative procedure of the genetic algorithm to the model than it is to optimize the process directly on-line.

Each stage of the two-stage process is controlled by a decision table controller with the controller table consisting of 49 elements (7 error values and 7 change-in-error values). Controller table represents the dependence of the controller output upon the controller inputs (error and change-in-error). The controller inputs are normalized values of the error and the change-in-error. The output (x_k) is a normalized value of the manipulated input to processes i.e. power of heater 1 and heater 2. Coordinating unit simultaneously tunes both of the controller tables according to the multiobjective criterion. The task of the second level (i.e. coordination unit) is to co-ordinate and achieve the desired behavior of the process as a whole in the unsteady environment conditions by means of adjusting the controller tables. Detailed description of plant and results of multilevel co-ordinate control can be found in (Grundler 1997).

4. Multiobjective optimization criteria

Process behavior is optimized with respect to multiobjective criteria (fitness) for various test patterns:

$$J=tanh\left(\frac{1}{\sum_{p=0}^{VT}\sum_{t=0}^{TMAX}\left[T_w\cdot\left(P_{1p}+P_{2p}\right)+T_e\cdot e_p\cdot t\right]\cdot\Delta t}\right) \quad (4\text{-}1)$$

$$|\varepsilon_j| \le |\varepsilon_{jmax}| \text{ for } T_{rj} \text{ within time } 0 \le T_{MAX},\ j=1,2 \quad (4\text{-}2)$$

where:

J	fitness (to be maximized),
T_w	weight term for power part of criteria,
T_e	weight term for ITE part of criteria,
P_{1p}	power of first cascade process for p-th test patern,
P_{2p}	power of second cascade process for p-th test pattern,
e_p	error (difference between reference and process output for p-test pattern),
V_T	total number of test patterns, in this research V_T=11,

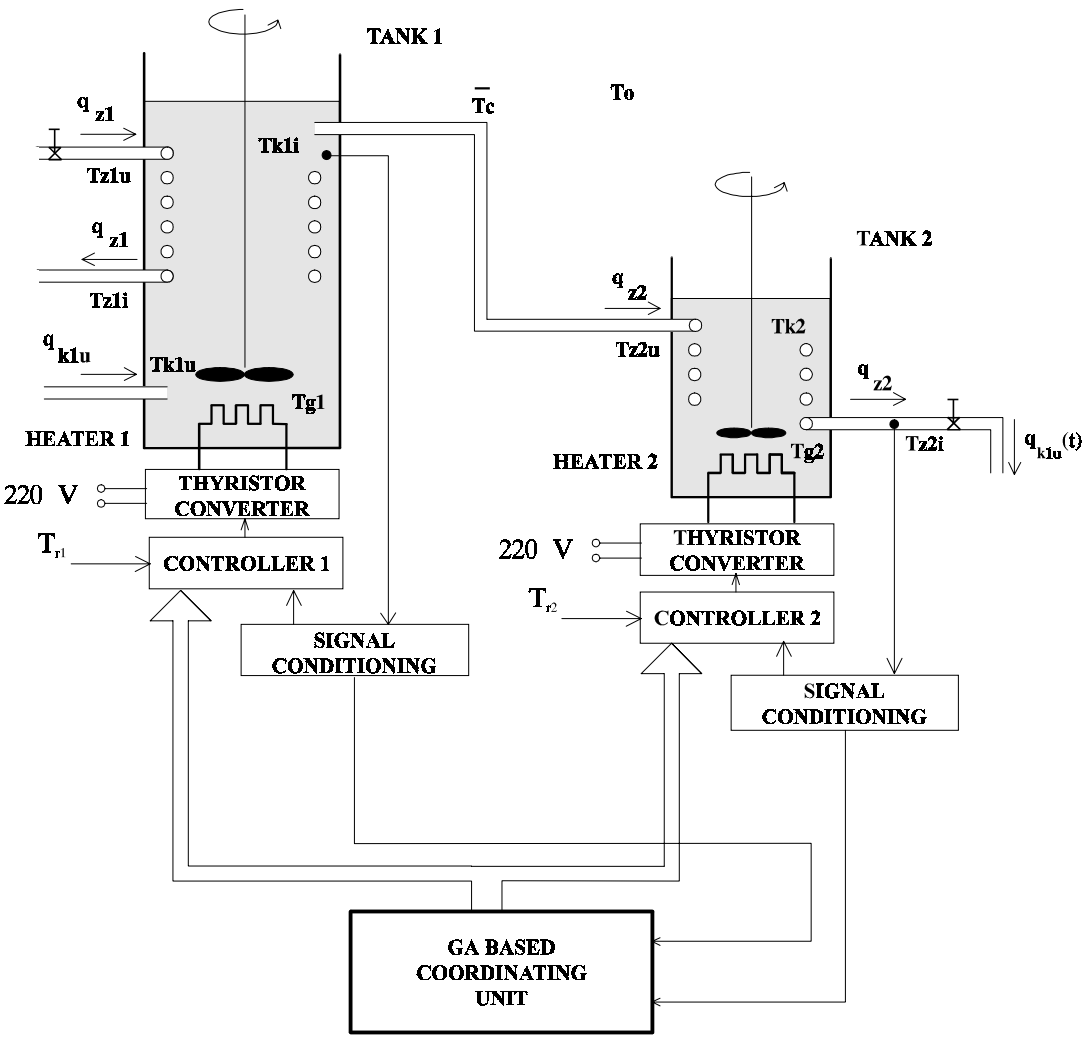

Figure 2: Laboratory plant

t	time,
Δt	sampling interval (in this research Δt=0.1),
T_{MAX}	total test pattern interval (in this research T_{MAX}=3000),
ε_j	error (difference between reference and actual output of j-th process (j=1,2),
ε_{jmax}	maximum error of j-th process (j=1,2); in this research $\varepsilon_{jmax} = \max\lvert(T_j-T_{rj})/T_{rj})\rvert$=0,05; i.e. 5% ($T_j$ is output temperature of j-th process, T_{rj} is reference temperature of j-th process).

The decision table was tuned for various step disturbances and various reference inputs in order to explore the whole decision table space. It is necessary because with only one reference input and one disturbance step input there are regions of decision table which never act and are not explored by algorithm. In contrast to traditional or fuzzy controller design, using as many as feasible step disturbances during optimizing procedure is essential when using DTC controller. If only one step disturbance is used than only some regions of DTC table will be active during genetic algorithm based tuning procedure and there will be regions of DTC tables that never act and can not be tuned ("don't care regions"). If such tuned DTC is applied to real-world process subject to stochastic disturbance, all parts of DTC table became relevant and "don't care regions" of DTC tables produce unacceptable behavior of controller. This (at first glance unexpected) fact surfaced during first experiments with genetic based optimizing of DTC controller (Grundler 1997). Number and shape of disturbances during optimizing procedure depends on process characteristics and goal of optimizing. Basically there are two contradictory requirements: more various disturbances will yield better results and less of them will result in faster algorithm. Experimenting with described cascade lab plant it was found out that 11 step disturbances gives acceptable results. Although more disturbances can improve overall plant behavior, achievement is too small to compensate for additional algorithm cost (time).

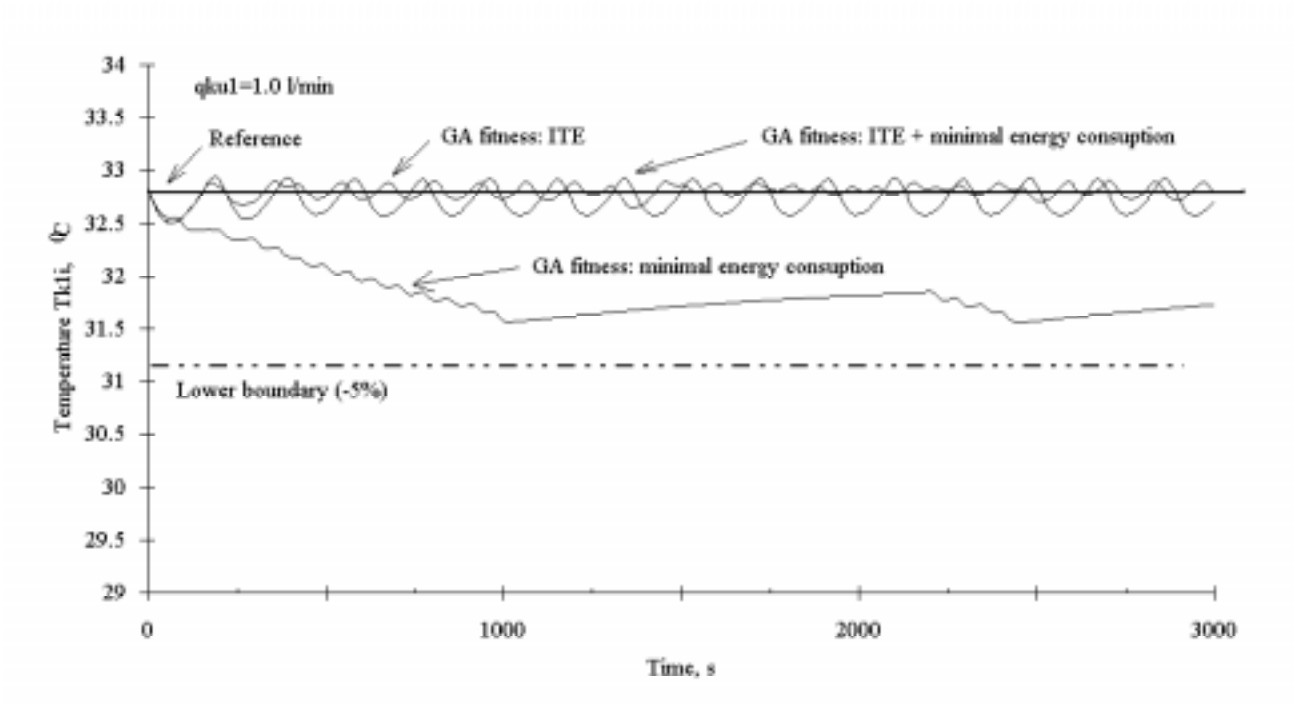

Figure 3: Controlled process response with various optimizing criteria

5. Genetic algorithm parameters

Chromosome of one individual is binary string which is simple linear combination of both decision tables: [x_{a11} x_{a12} ... x_{a77} x_{b11} x_{b12} ... x_{b77}]. Optimizing is carried out by a single point crossover canonical genetic algorithm with the following parameters: length of binary coded individual 784 (two controller tables 2·49=98 parameters, 8-bit string each), population size 90, number of generations 90, probability of crossover 0.7, probability of mutation 0.025. A population is a set of decision tables and the best population member is the best decision table.

Optimization is carried out on ordinary PC (133 MHz Pentium). Plant model and genetic algorithm optimizing procedure was custom-made Pascal program. By purpose canonic genetic algorithm was used to check feasibility of basic idea, and not to check genetic algorithm performance itself. Applying some other variants of genetic algorithm can yield in even better results, specially regarding efficiency of algorithm.

6. Results

The procedure described has brought about the average energy saving of 5% - 10% (Grundler 1997) compared to traditional control procedures (depending on the procedure, process steady state and disturbance) if the only criteria is power savings (i.e. T_p=1, T_e=0). The saving was accomplished due to the allowed 5% response deviation from the reference temperature. By means of control the response was kept close to the boundary which is favorable from the point of view of energy saving.

The unwanted effect of such control is the unforeseeable response within the set boundaries, e.g. the unwanted oscillations. This is the consequence of the overall criterion which optimizes the behavior of the process only from the standpoint of energy saving and boundaries of deviation of response. If necessary, all other important aspects of the behavior of the process should be included in the criterion. By doing so, it must be kept in mind that certain requirements are contradictory (e. g. minimal deviation of response from reference is contrary to the minimal energy consumption). Fig. 3. shows typical process output achieved with described GA optimized multilevel control with various optimizing criteria. It is evident that in the case of minimum energy consumption criteria output is kept close to the constraint boundary, which is preferable from the criteria standpoint. On the other hand, in the case of ITE criteria (i.e. T_p=0, T_e=1) output is close to T_{rj}, but there is negligible energy savings compared to traditional control methods (e.g. PID control) (Grundler 1997). Combining both criteria (i.e. $T_p \neq 0$, $T_e \neq 1$) it is possible to get in-between results. One example is presented on Fig. 3 for . T_p=0,5, T_e=0,5 (ITE + minimal energy consumption). Compared to T_p=1, T_e=0 case there are increase in overall plant energy consumption but much better accuracy of output temperature. Compared to T_p=0, T_e=1 case there are better energy savings but worse accuracy. It is important to note that from

algorithm standpoint changing of optimizing criteria is trivial. Only two parameters T_p and T_e has to be changed which is quite easy to implement. Optimizing criteria is separated from the rest of the algorithm and can be changed independently. Of course if there is need to change formula (4-1) there is more change in the program, but still only in the fitness function part and not in the rest of the algorithm.

7. Conclusion

Multiobjective optimizing of multilevel coordinate control using DTC applied to specific laboratory plant indicates that proposed genetic algorithm based procedure is feasible and has some essential advantages over traditional methods. Main features of proposed methods are:

- optimizing procedure is simple and independent of process characteristics and optimizing criteria,
- optimizing criteria can be changed without modifying optimizing procedure,
- online procedure can be used for process without mathematical model of process,
- because of genetic algorithm procedure is robust and finds global optimum.

Main disadvantage of proposed method is costly algorithm, mainly because of fitness function calculation. In the case of online procedure minimum time needed for fitness function evaluation is T_{MAX} which depends on time constants of process and requirements on output characteristics.

There are two main directions of future research. First is on the side of evolution algorithm. Instead of simple canonic genetic algorithm some more sophisticated variant can be used to improve algorithm efficiency. Another direction is on the side of DTC. There are promising initial results to improve overall performance modifying DTC, e.g. using nonlinear function f_E and function f_{DE}, i.e. nonlinear distribution of error and change-in-error discrete values (Grundler 1999) or using multihorizon DTC (Grundler 1999).

8. References:

1. Bäck T., Hoffmeister F., Schwefel, H.P. (1992) "Applications of evolutionary algorithms", Report of the Systems Analysis Research Group SYS-2/92, University of Dortmund, Department of Computer Science.
2. Chipperfield, A and P. Fleming (1995) "Genetic algorithms in control systems engineering", Control comput., 3 (23), pp. 88-94.
3. Eksin, I. and Osman Kaan E. (1996) " Design of optimum fuzzy controller using genetic algorithms", Proceedings of the 1996 8th Mediterranean Electrotechnical Conference, MELECON, IEEE Piscataway NJ USA, pp. 186-190.
4. Fleming, P.J., C.M. Fonesca (1993) "Genetic Algorithms in Control Systems Engineering", Proc. of the IFAC 1993 World Congress, pp. 605-612.
5. Goldberg, D.E. (1989) "Genetic Algorithms in Search Optimization & Machine Learning", Addison-Wesley, pp. 412.
6. Grundler, D, (1998) "GA Adjustment of Mulithorizon Decision Table", EUFIT 98, 6th European Congress on Inteligent Techniques & Soft Computing, Aachen, Germany, Sept. 7-10, Proc. Vol. 1, pp. 434-438.
7. Grundler, D. (1997) "Genetickim algoritmom optimirano neizrazito viserazinsko vodjenje procesa", (in Croatian language), Doctoral dissertation, FER Zagreb, 1997.
8. Grundler, D. (1999) "Decision Table Tuning Using a Genetic Algorithm", EuroGEN99, Jyvaskyla, Finland, 30.5.-3.6.1999, Proc. of EUROGEN99, Univ. of Jyvaskyla, Finland, ISBN 951-39-0473-3, pp. 73-78.
9. Nordvik J.P., and J.M. Renders (1991) "Genetic Algorithms and their Potential for Use in Process Control: a Case Study", Proc. of the Fourth International Conference on Genetic Algorithms", pp. 480-486.
10. Pham, D.T. and D. Karaboga (1991) "Optimum design of Fuzzy Logic Controllers Using Genetic Algorithms", J. Syst. Eng., 1, pp. 114-118.
11. Renders, J.M., J.P. Nordvik and H. Bersini (1992) "Genetic algorithm for process control: A survey", Proc. of the IFAC/IFIP/IMACS Intern. Symp. on Artificial Intelligence in Real-time Control, pp. 579-584.
12. Stipanicev, D (1989) "Teorija i primjena neizrazitog povratnog vodjenja", (in Croatian language), Automatika, 5-6 (30), pp. 179-188.
13. Tan, G.V., X. Hu (1996) " On designing fuzzy controllers using Genetic Algorithms", IEEE International Conference on Fuzzy Systems Proceedings of the 1996 5th IEEE International Conference on Fuzzy Systems, pp. 905-911.
14. Thrift, P. (1991) "Fuzzy Logic Synthesis with Genetic Algorithms", Proc. of the Fourth International Conference on Genetic Algorithms", pp. 509-513.
15. Varsek, A,.T. Urbanic, B. Filipic (1993) " Genetic algorithms in controller design and tuning ", IEEE Transactions on Systems, Man and Cybernetics, 5 (23), pp. 1330-1339.